INNOVATION. PRECISION. EXCELLENCE.

Valve Specifications

Dimensions
139.7 mm x 69.22 mm x 25.56 mm
(5.5 in x 2.73 in x 1.40 in)

Weight
9 oz (0.26 kg)

Viscosity Range
25,000 cps – Paste

Minimum Shot Size (Filled Material)
0.020" (0.5 mm) Dots

Maximum Inlet Fluid Pressure
100 psi

Auger Material
Carbide

Auger Motor
24V DC Servo Motor

SV200 Auger Valve

The SV200 Auger Valve is ideal for dispensing 2-part, premixed epoxies and pastes in dot and bead patterns. The SV200 can dispense dots as small as 0.020 in diameter and features a quick release to separate the motor assembly from the auger for easy cleaning of entire fluid path. The SVC100 Servo Controller provides customized valve settings for handheld or automated applications.

The SV200 has many integrated features including:

- The choice of an 8 or 16 pitch carbide auger for custom profiles
- 3, 5, 10, or 30 cc syringe barrel inserts
- Quick release for easy cleaning
- Disposable feed tube connects syringe to the fluid body
- Virtually zero dead space within the valve design
- Field maintainable design
- 24V DC servo motor drive with optional encoder to provide displacement feedback
- Adjustable auger speed and reverse motion for clean cycle stops

For more information, please contact PVA at info@pva.net or contact your local representative.

Headquarters
6 Corporate Drive | Halfmoon, NY 12065
tel +1 518 371 2684 | fx +1 518 371 2688
www.pva.net | info@pva.net
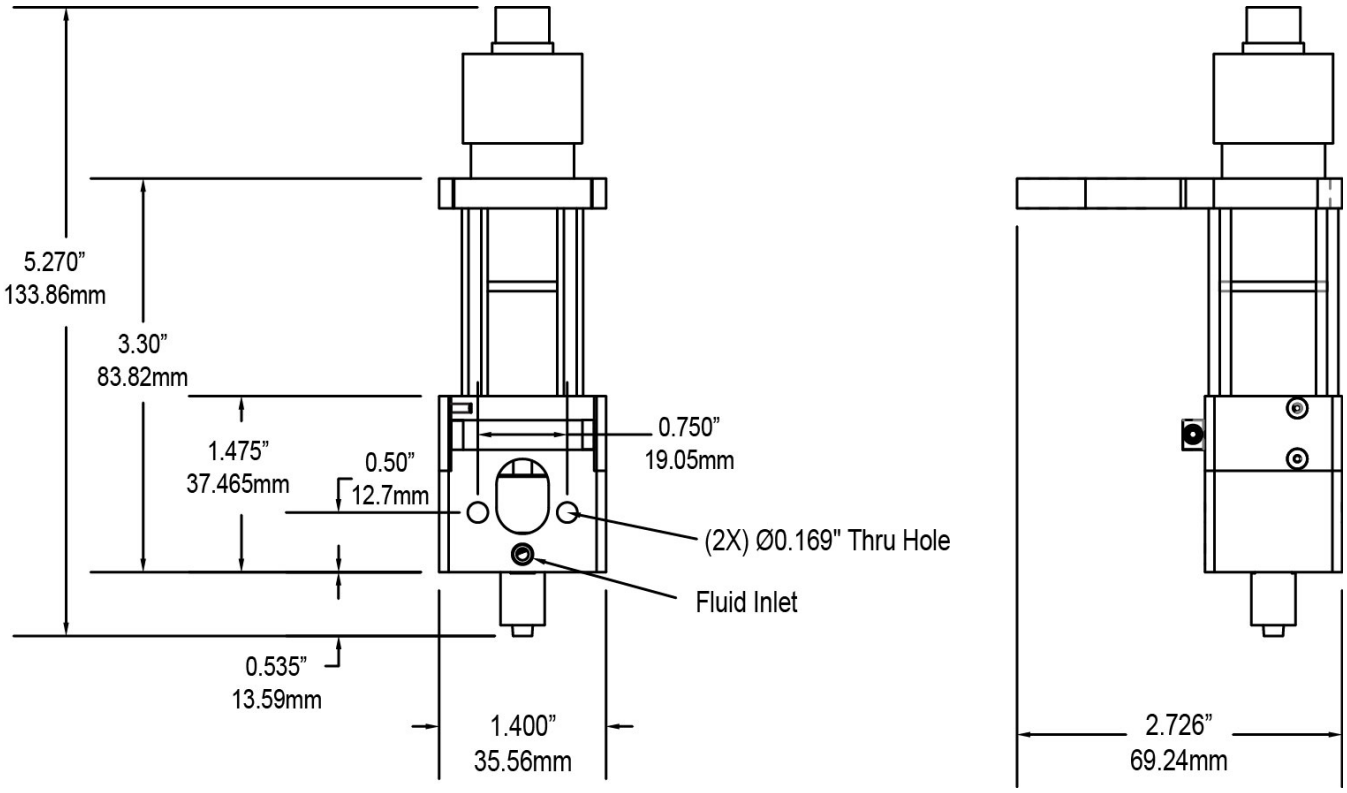
SV200 Mounting Dimensions